MICRO-EPSILON

More Precision

wireSENSOR // Draw-wire displacement sensors

Low-cost draw-wire sensors
wireSENSOR MK46 analog

- Robust plastic housing
- Customer-specific designs
- Wire or hybrid potentiometer

Output P10/P25

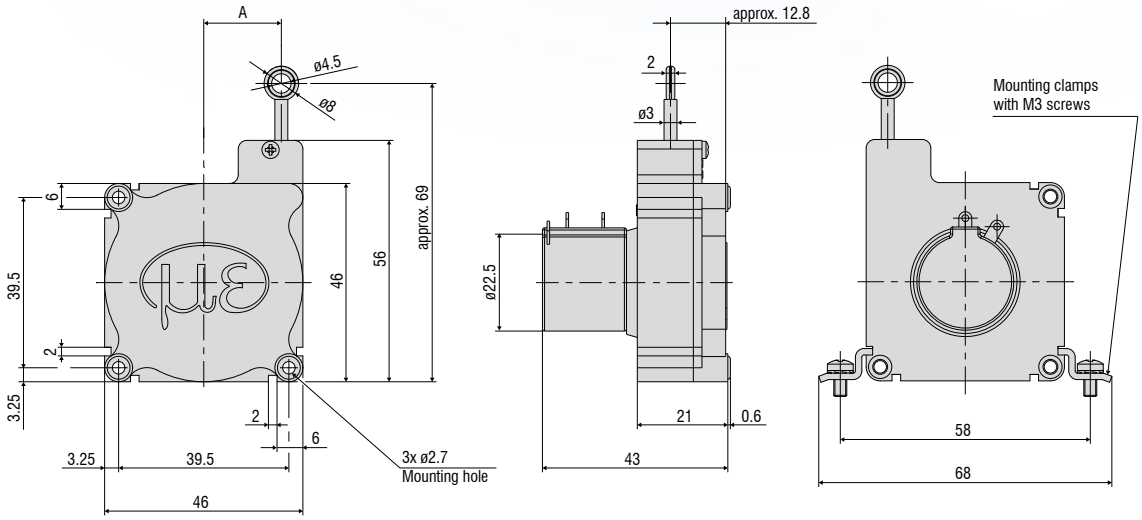

Measuring range (mm)	A (mm)
1000	approx. 18
1250	approx. 20

Output CR-P10/CR-P25/CR-U10/CR-I10

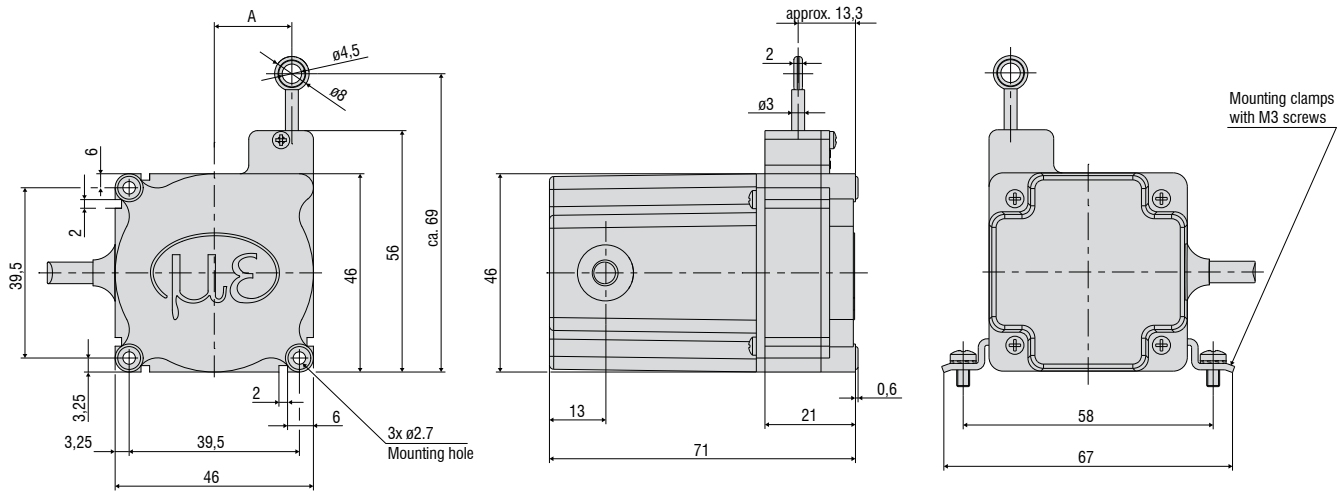

All dimensions in mm, not to scale

Model			WPS-1000-MK46	WPS-1250-MK46
Measuring range			1000 mm	1250 mm
Analog output			Potentiometer	Potentiometer, current, voltage
Resolution	Wire potentiometer P25		0.3 mm	0.4 mm
	Hybrid potentiometer P10/U10/I10		towards infinity	
Linearity	Wire potentiometer P25	≤ ±0.25% FSO	≤ ±2.5 mm	≤ ±3.12 mm
	Hybrid potentiometer P10/U10/I10	≤ ±0.1% FSO	≤ ±1 mm	≤ ±1.2 mm
Sensor element			Wire/hybrid potentiometer	
Wire extension force (max.)			approx. 1.6 N	approx. 1.5 N
Wire retraction force (min.)			approx. 1 N	
Wire acceleration (max.)			approx. 5 g	
Material	Housing		Plastics	
	Measuring wire		Polyamide-coated stainless steel (ø 0.36 mm)	
Wire mounting			Eyelet (ø 4.5 mm)	
Installation			Mounting holes or mounting grooves on the sensor housing	
Temperature range	Storage		-20 … +80 °C	
	Operation		-20 … +80 °C	
Connection	P10/P25		Soldering tags	
	CR-P10/CR-P25/CR-U10/CR-I10		integrated cable, radial, length 1 m	
Shock (DIN EN 60068-2-27)			50 g / 5 ms in 3 axes, 2 directions and 1000 shocks each	
Vibration (DIN EN 60068-2-6)			20 g / 20 … 2000 Hz in 3 axes and 10 cycles each	
Protection class (DIN EN 60529)			IP20	
Weight			approx. 80 g	

FSO = Full Scale Output
[1] Specifications for analog outputs from page 58 onwards.

Article designation

WPS - 1000 - MK46 - P25

- P25: Output type:
  P10: Potentiometer
  P25: Potentiometer
  CR-P10/P25: potentiometer, integrated cable, radial, 1 m
- MK46: MK46 series
- 1000: Measuring range in mm

WPS - 1250 - MK46 - P25

- P25: Output type:
  P10: Potentiometer
  P25: Potentiometer
  CR-P10/P25: potentiometer, integrated cable, radial, 1 m
  CR-U10: Voltage, integrated cable, radial, 1 m
  CR-I10: Current, integrated cable, radial, 1 m
- MK46: MK46 series
- 1250: Measuring range in mm

Low-cost draw-wire sensors
wireSENSOR MK46 digital

- Robust plastic housing
- Customer-specific designs
- Incremental encoder

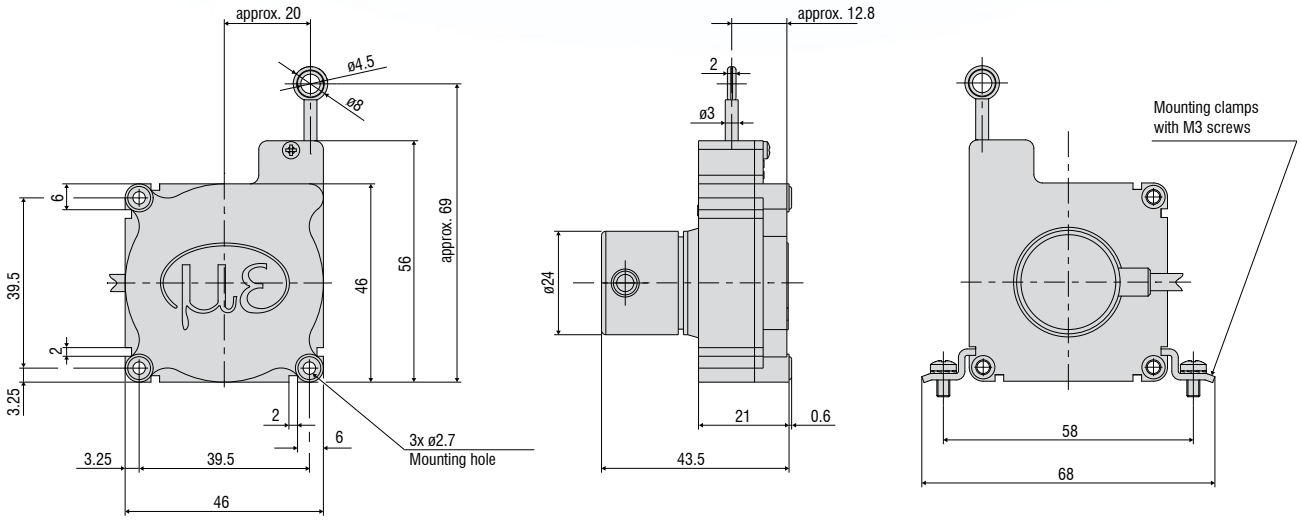

All dimensions in mm, not to scale

Model		WPS-1250-MK46
Measuring range		1250 mm
Digital output [1]		Encoder: E (5 … 24 VDC) / Encoder E830 (8 … 30 VDC)
Resolution		4 pulses/mm
		0.25 mm
Linearity		≤ ±0.05% FSO
		≤ ±0.625 mm
Sensor element		Incremental encoder
Wire extension force (max.)		approx. 1.5 N
Wire retraction force (min.)		approx. 1 N
Wire acceleration (max.)		approx. 5 g
Material	Housing	Plastics
	Measuring wire	Polyamide-coated stainless steel (ø 0.36 mm)
Wire mounting		Eyelet (ø 4.5 mm)
Installation		Mounting holes or mounting grooves on the sensor housing
Temperature range	Storage	-20 … +80 °C
	Operation	-20 … +80 °C
Connection		integrated cable, radial, length 1 m
Shock (DIN EN 60068-2-27)		50 g / 5 ms in 3 axes, 2 directions and 1000 shocks each
Vibration (DIN EN 60068-2-6)		20 g / 20 … 2000 Hz in 3 axes and 10 cycles each
Protection class (DIN EN 60529)		IP54
Weight		approx. 120 g (incl. cable)

FSO = Full Scale Output
[1] Specifications for digital outputs from page 59 onwards.

Article designation

WPS -	1250 -	MK46 -	E
			Output type: Encoder E (5 ... 24 VDC) Encoder E830 (8 ... 30 VDC)
		MK46 series	
	Measuring range in mm		

Options
wireSENSOR

Customer-specific modifications for your series application

If the standard models do not meet certain specific requirements, draw-wire sensors from the standard range can be adapted accordingly by Micro-Epsilon. Cost-effective implementation can already be achieved with medium-sized quantities (depending on the type and number of changes).

Wire attachment
- Wire clip
- Eyelet
- Thread
- Wire extension

Measuring wire
- Plastics
- Stainless steel (coated/uncoated)
- Different diameters
- Thicker wire for improved snap protection

Connection/Output signal
- Different cable lengths
- Different plug variants
- Redundant sensor element
- Adaption of supply voltage
- Inverted signal
- Redundant signal outputs
- Alignment cable/connector outlet

Sensor mounting
- Mounting bracket
- Mounting plate
- Magnetic holder

Wire guide
- Wire wiper
- Different designs of integrated deflection pulleys
- Wire outlet socket from ceramics for increased diagonal pull up to 15°

Housing and environment
- Wire outlet right (standard) / left
- Protection class up to IP69K
- Drainage holes
- Stainless steel spring
- Housing material
- Wire acceleration
- Snap protection

* Some options cannot be combined with each other; availability of options on request

Wire deflection pulleys for external installation

TR1-WDS
Wire deflection pulley, adjustable, for sensors with a wire diameter ≤ 0.45 mm

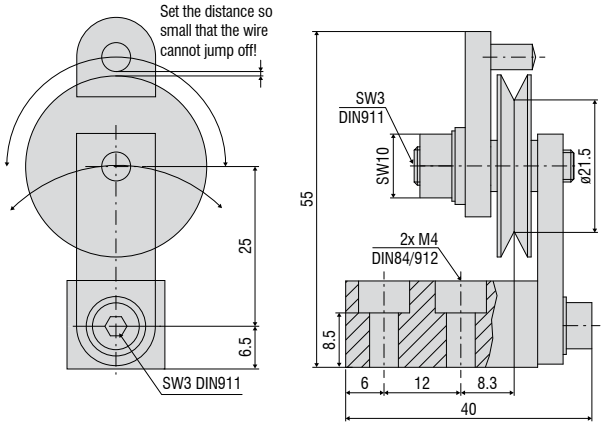

TR3-WDS
Wire deflection pulley, fixed, for sensors with a wire diameter ≤ 0.45 mm

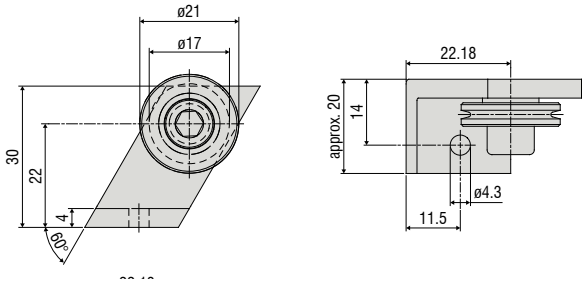

TR4-WDS
Wire deflection pulley, fixed, for sensors with a wire diameter of 0.8 mm to 1 mm

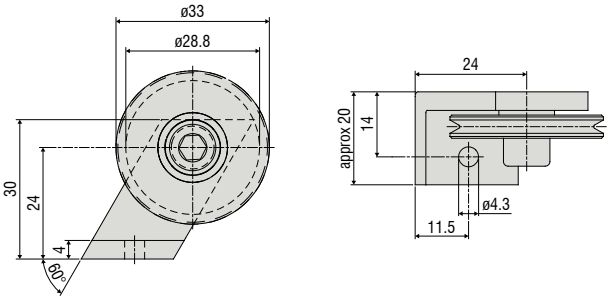

Wire deflection pulley for direct installation on the sensor housing

TR5-WDS
Integrated wire deflection pulley for P115 sensors
with a wire diameter of 0.45 mm

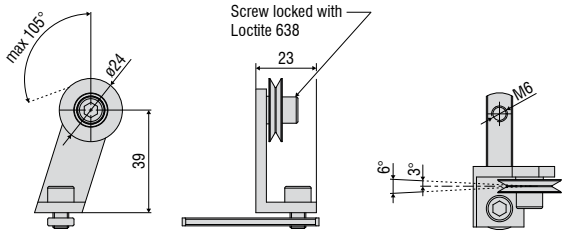

All dimensions in mm, not to scale

TR5-WDS(03)
Integrated double deflection pulley for P115 sensors with a wire diameter of 0.45 mm

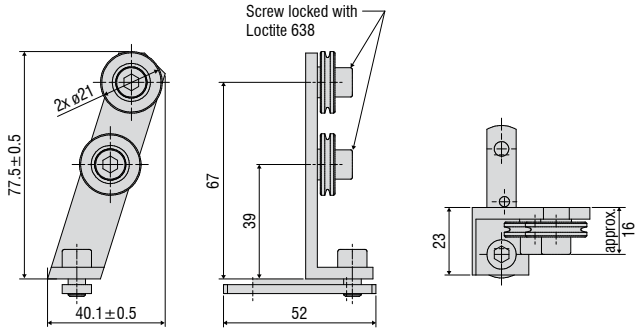

TR5-WDS(04)
Integrated double deflection pulley, 90° angled, for P115 sensors with a wire diameter of 0.45 mm

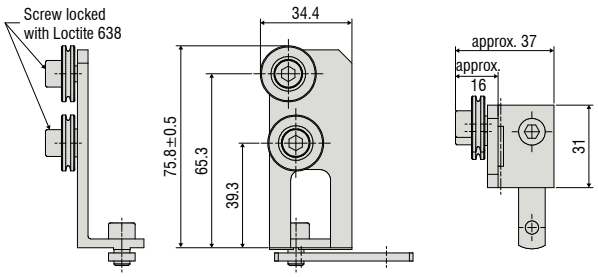

TR6-WDS(01)
Integrated wire deflection pulley for the P115 sensors with a wire diameter of 1 mm

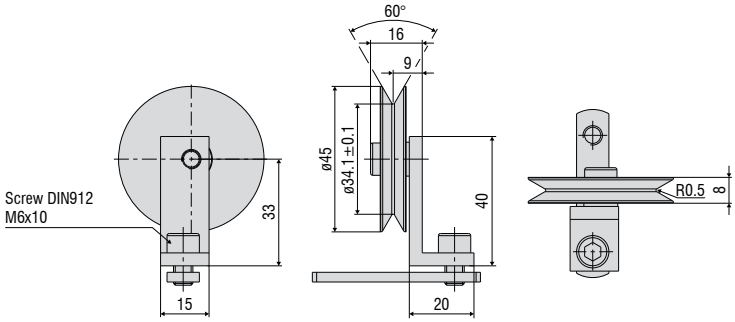

Mounting bracket set

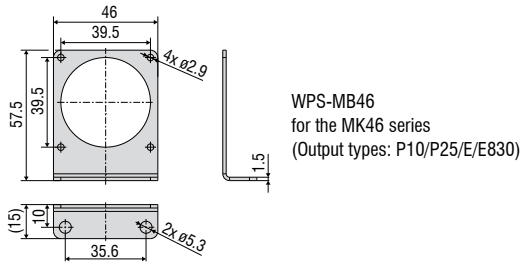

WPS-MB46
for the MK46 series
(Output types: P10/P25/E/E830)

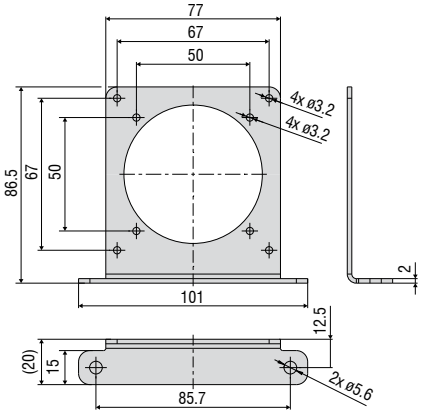

WPS-MB77
for the MK77 series

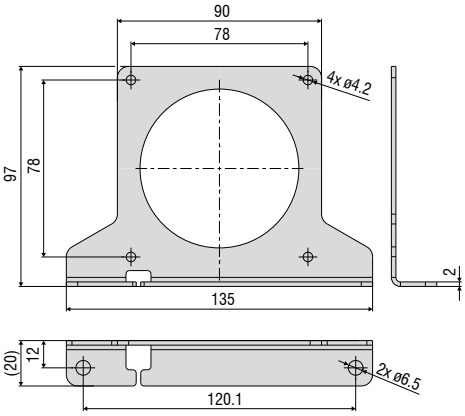

WPS-MB88
for the MK88 series

Accessories & Notes for installation
wireSENSOR

Accessories	
WE-xxxx-M4	Wire extension with M4 wire connection, x=wire length
WE-xxxx-Clip	Wire extension with eyelet, x = wire length
WE-xxx-Clip-WSS	Wire extension with clip and uncoated wire d=0.45 mm
WE-xxxx-Ring-PW	Wire extension with plastic ring and para-aramid wire, 1 mm
GK1-WDS	Fork head for M4
MH1-WDS	Magnetic holder for wire attachment
MH2-WDS	Magnetic holder for sensor mounting
MT-60-WDS	Mounting clamps for WDS-P60
FC8	Mating plug for WDS straight, 8-pin
FC8/90	Mating plug, 90° angled for WDS
PC3/8-WDS	Sensor cable, 3 m long, for WDS with 8-pin cable connector
WDS-MP60	Mounting plate for P60 models
WPS-MB46	Mounting bracket set for the MK46 series (output type: P10/P25/E/E830)
WPS-MB77	Mounting bracket set for the MK77 series
WPS-MB88	Mounting bracket set for the MK88 series
PC2/10-WDS-A	Cable for SSI encoder, 2 m long
PC10/10-WDS-A	Cable for SSI encoder, 10 m long
PC5/5-IWT	Sensor cable, 5 m long, M12x1 connector, 5-pin, A-coding

Example application with accessories

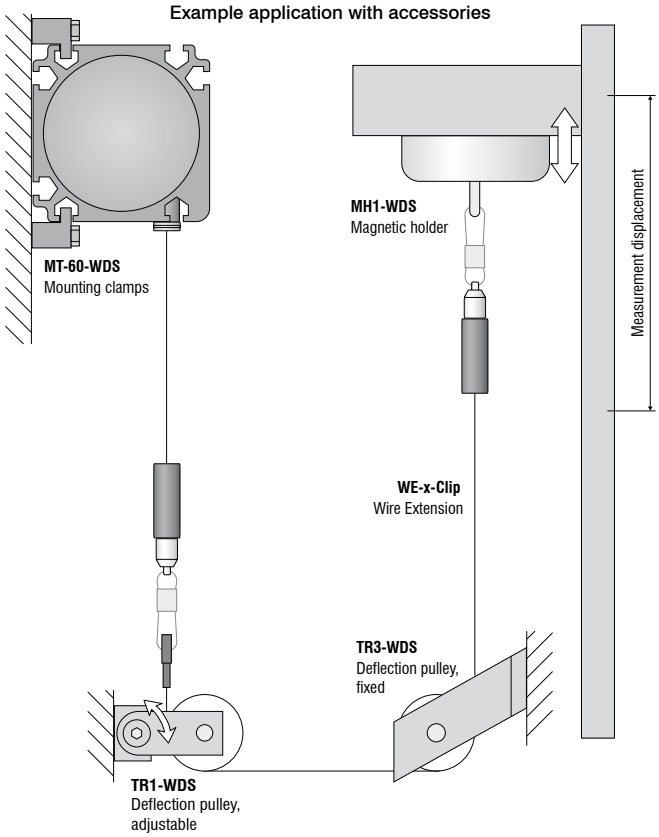

WDS-MP60
Mounting plate for P60 models

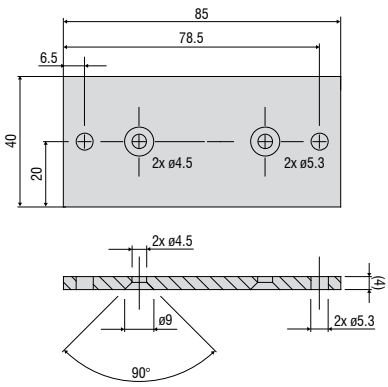

All dimensions in mm, not to scale

Installation instructions:

Wire attachment: during installation, do not allow at any time the measuring wire to freely return.

Angle of wire outlet: Make sure during installation that the wire outlet is straight (tolerance of ±3°). Exceeding this tolerance leads to increased wear of the wire material and on the wire outlet.

Wire outlet 0° (±3° tolerance)

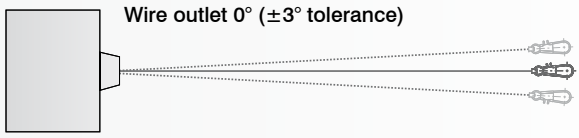

WE-xxxx-M4
Wire extension with M4 wire connection, x=wire length

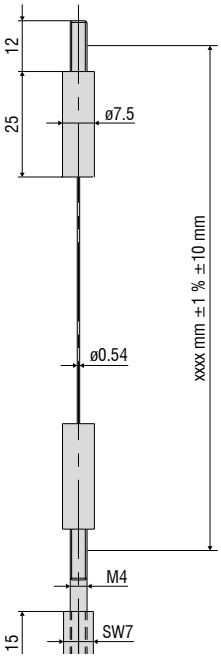

WE-xxxx-Clip
Wire extension with eyelet, x = wire length

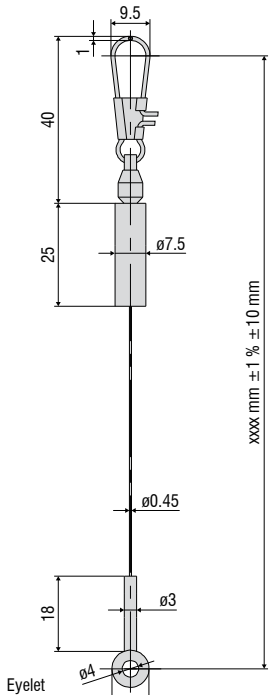

MH1-WDS
Magnetic holder for wire attachment

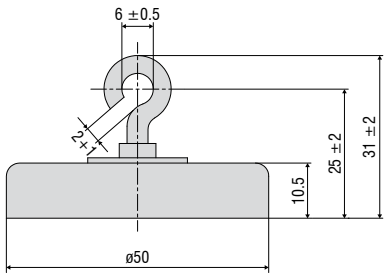

MH2-WDS
Magnetic holder for sensor mounting

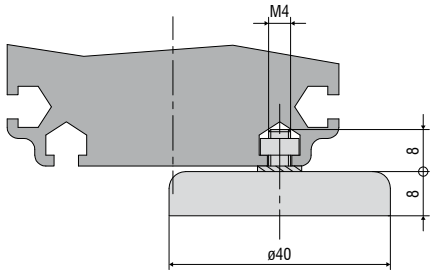

GK1-WDS
Fork head for M4

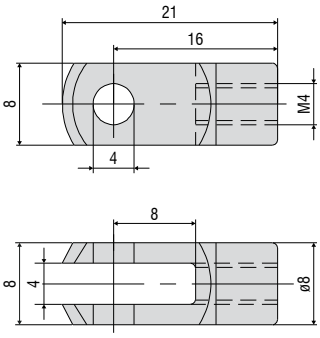

MT-60-WDS
Mounting clamps for WDS-P60

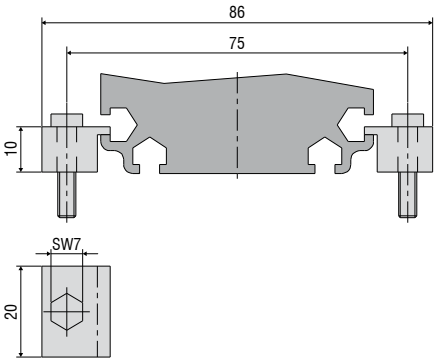

Output specifications
wireSENSOR

Analog

Output		Connector M16 -SA / -SR	Integrated cable -CA / -CR	Open contacts
Potentiometer output (P)		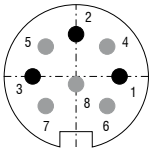 Sensor side		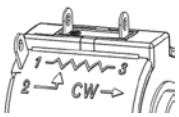 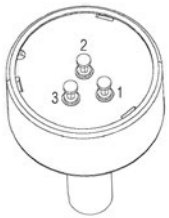
Input voltage	max. 32 VDC with 1 kOhm / max. 1 W			
Resistance	1 kOhm ±10 % (resistance divider)			
Temperature coefficient	±0.0025 % FSO/°C			
		1 = Input + 2 = Ground 3 = Signal	White = Input + Brown = Ground Green = Signal	1 = Input + 2 = Signal 3 = Ground 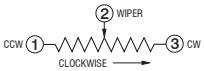
Voltage output (U)		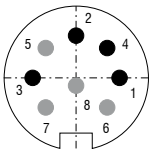 Sensor side		
Supply voltage	14 ... 27 VDC (non-stabilized)			
Current consumption	max. 30 mA			
Output voltage	0 ... 10 VDC Option 0 ... 5 / ±5 V			
Load resistance	>5 kOhm			
Output noise	0.5 mV_{eff}			
Temperature coefficient	±0.005 % FSO/°C			
Electromagnetic compatibility (EMC)	EN 61000-6-4 EN 61000-6-2			
Adjustment range (if supported by the model)		1 = Power supply 2 = Ground 3 = Signal 4 = Ground	White = Supply Brown = Ground Green = Signal Yellow = Ground	
Zero	±20 % FSO			
Sensitivity	±20 %			
Current output (I)		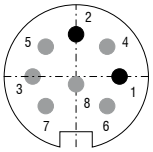 Sensor side		
Supply voltage	14 ... 27 VDC (non-stabilized)			
Current consumption	max. 35 mA			
Output current	4 ... 20 mA			
Load	<600 Ohm			
Output noise	<1.6 μA_{eff}			
Temperature coefficient	±0.01 % FSO/°C			
Electromagnetic compatibility (EMC)	EN 61000-6-4 EN 61000-6-2			
Adjustment range (if supported by the model)				
Zero	< ±18 % FSO	1 = Power supply 2 = Ground	White = Supply Brown = Ground	
Sensitivity	±15 %			

CANopen

(for the MK88 and K100 series)

CANopen features	
Profiles	Communication profile CiA 301. Device profile CiA 406 (absolute linear encoder)
SDO	1x SDO server
PDO	2x TxPDO
PDO modes	Event/time-triggered, synchronous (cyclic/acyclic)
Preset value	The "Preset" parameter can be used to set the current measured value to any value. The difference from the original value is stored in the object.
Direction	Via the operating parameter, the counting direction of the measured values can be reversed
Diagnosis	Heartbeat, Emergency Message
Default setting	AutoBaud(9), Node-ID 1

Setting the baud rate	
Baud rate adjustable via LSS or object 0x3001	
0	1000 kBaud
2	500 kBaud
3	250 kBaud
4	125 kBaud
6	50 kBaud
9	AutoBaud (default)

Description of the connections	
Pin	Assignment
1	n. c.
2	V+ (7…32VDC)
3	GND
4	CAN-High
5	CAN-Low

5-pin
housing connector
View on pin side
A-coded

Setting the subscriber address (node ID)
Address adjustable via LSS or object 0x3000 (1....127, 1=default)

Output specifications
wireSENSOR

CANopen
(for P60, P96, P115 and P200 series)

Setting the CANopen baud rate			
Baud rate	DIP switch setting		
	1	2	3
10 kBit/s	OFF	OFF	OFF
20 kBit/s	OFF	OFF	ON
50 kBit/s	OFF	ON	OFF
125 kBit/s	OFF	ON	ON
250 kBit/s	ON	OFF	OFF (factory settings)
500 kBit/s	ON	OFF	ON
800 kBit/s	ON	ON	OFF
1 MBit/s	ON	ON	ON

If Node-ID 00 is set, the baud rate can be programmed via the CAN bus.

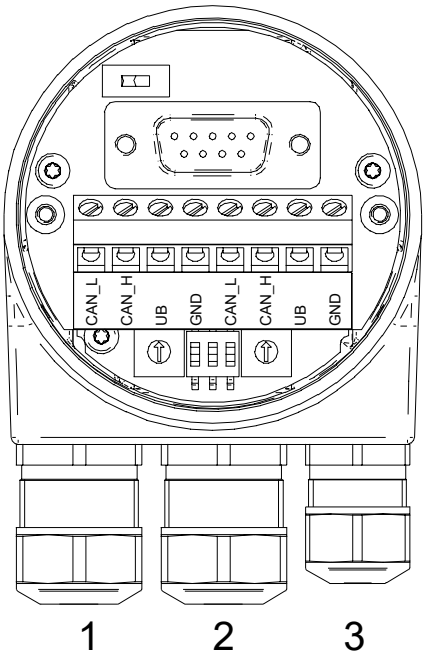

Description of the CANopen connections	
GND	Ground connection for UB
UB	Operating voltage
CAN_H	CAN bus signal (dominant High)
CAN_L	CAN bus signal (dominant Low)

Max. core cross-section	
Single-wire (rigid)	1.5 mm 2
Fine-wired (flexible)	1.0 mm2
Fine-wired (flexible)	With ferrule 0.75 mm2

Cable diameter	
Cable gland 1,2	ø8...10 mm (-40...+85 °C) ø5...9 mm (-25...+85 °C)
Cable gland 3	ø4.5...6 mm (-40...+85 °C) ø3...6 mm (-25...+85 °C)

Tightening torque
Terminal block/screw terminal max. 0.4 Nm (recommended tightening torque 0.3 Nm)

Settings of the CANopen participant address
Address can be set with rotary switch. Example: Participant address 23

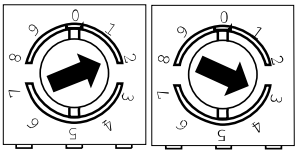

SSI (Gray Code)

Pin assignment	
Flange socket M23, 12-pin, pin contacts, CW (assignment according to option 3252)	
PIN	Assignment
1	+Vs
2	0 V
3	Clock+
4	Data+
5	SET
6	Data-
7	Clock-
8	-
9	DIR
10	-
11	-
12	-

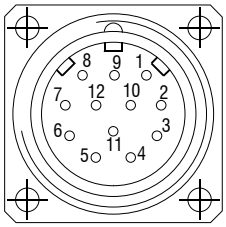

Connections	
SET	**Zero setting input** For setting a zero point at any point. The zeroing process is triggered by a High pulse and must take place after the rotating direction selection (DIR). Pulse duration > 100 ms. For maximum interference immunity, connect to 0 V after zeroing.
DIR	**Counting direction input** When not connected, this input is on High. DIR High means increasing output data with a clockwise rotating shaft when looking at the flange. DIR Low means increasing values with a counterclockwise rotating shaft when looking at the flange. For maximum interference immunity, connect to +Vs or 0 V depending on the direction of rotation.

Switching level	
SSI switch	
SSI clock	RS422 with terminating resistance 120 Ω
SSI data	RS422
Control inputs of input circuit	
Input level High	>0.7 UB
Input level Low	<0.3 UB
Input resistance	10 kΩ

Output specifications
wireSENSOR

PROFIBUS

Profibus DP features	
Bus protocol	Profibus-DPV0
Device profile	Device class 1 and 2
Cyclical data exchange	Communication in accordance with DPV0
Input data	Position value Additional configurable speed signal
Output data	Preset value
Preset value	This parameter can be used to set the rotary encoder to a desired position value that corresponds to a defined axis position of the system. The storage is non-volatile.
Rotary direction	This parameter can be used to parameterize the direction of rotation in which the position value should rise or fall.
Scaling	Parameterization of the steps per rotation and the total resolution.
Gear factor	Adjustable via counter / denominator
Diagnosis	Position and parameter errors Monitoring multi-turn scanning Readable hour meter

Pin assignment	
+Vs	Operating voltage 8...30 VDC
0 V	Ground connection related to +Vs
A	Negative data line
B	Positive data line
Terminals with the same designation are internally connected and functionally identical These internal terminal connections Vs-Vs / 0V-0V may be loaded with max. 1 A each	

Terminator

Both ON = last participant
Both OFF = participant X
Default setting OFF

Participant address

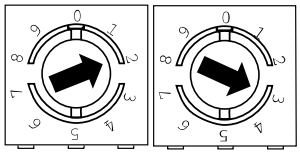

Adjustable via rotary switch
Example: Participant address 23
Default setting. 00

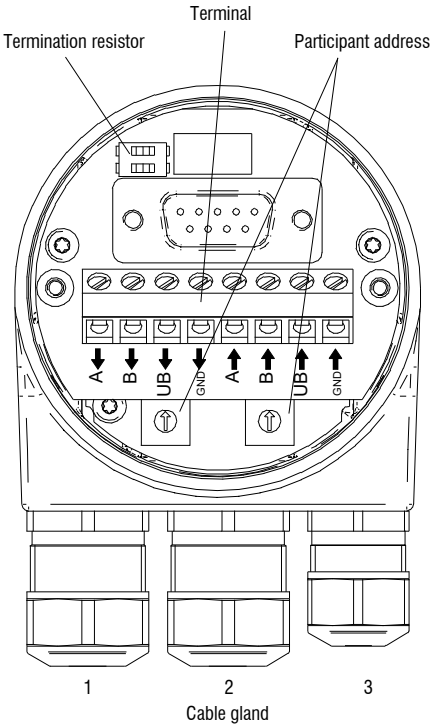

Cable: 1, 2 = ø8 - 10 mm (-40 - 85 °C) / ø5 - 9 mm (-25 - 85 °C)
Cable: 3 = ø4.5 - 6 mm (-40 - 85 °C) / ø3 - 6 mm (-25 - 85 °C)

PROFINET

PROFINET features	
Bus protocol	PROFINET IO
Device profile	Encoder Profile PNO 3.162 V4.1 and V3.1 PROFIdrive Profil PNO 3.172 V4.1
Real-time classes	Realtime (RT) Class 1, IRT Class 3
Transmission frequency	RT: 1 ms, 2 ms, 4 ms IRT: 250 µs, 500 µs, 1 ms, 2 ms, 4 ms
Update time	Min. 500 µs
Product features	- 100 MBaud Fast Ethernet - Device replacement without removable media - Media redundancy protocol MRP - Gear factor / round axis
Process data	- Position value 32-Bit input data with/without rotational speed 16 or 32 Bit - Telegram 81-83 of the PROFIdrive profile
LED status display	Link/Activity, Status, Error

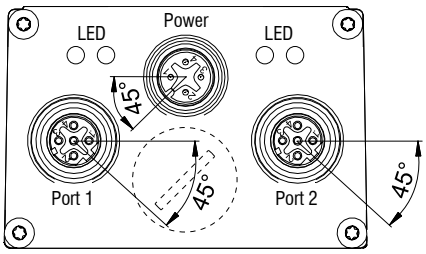

Pin Assignment

Operating voltage

Pin	Connection	Description
1	UB	Operating voltage
2	n.c.	Do not connect
3	GND	Ground connection
4	n.c.	Do not connect

1x flange connector M12 (pin), A-coded

PROFINET (data line)

Pin	Connection	Description
1	TxD+	Transmitted data+
2	RxD+	Received data+
3	TxD-	Transmitted data-
4	RxD-	Received data-

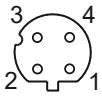

2x flange connector M12 (socket), D-coded

EtherNet/IP

EtherNet/IP characteristics	
Bus protocol	EtherNet/IP
Device profile	CIP Nov 2016, 22_{hex} Encoder
Cycle time	1 ms
Product features	- Gear factor (round axis) and continuous operation - Plausibility test of adjustable parameters - Comprehensive diagnosis function - Adress Conflict Detection - Device Level Ring - Several simultaneous IO connections
LED status display	2x Link/Activity, module status, network status

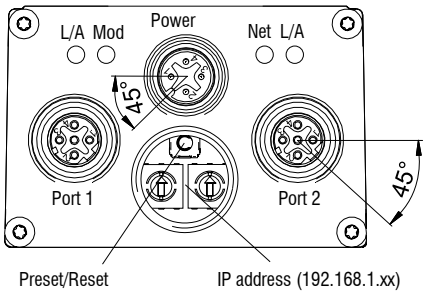

Pin Assignment

Operating voltage

Pin	Connection	Description
1	UB	Operating voltage
2	d.c.	Do not connect
3	GND	Ground connection
4	d.c.	Do not connect

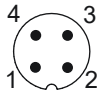

1x flange connector M12 (pin), A-coded

EtherNet/IP (data line)

Pin	Connection	Description
1	TxD+	Transmitted data+
2	RxD+	Received data+
3	TxD-	Transmitted data-
4	RxD-	Received data-

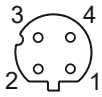

2x flange connector M12 (socket), D-coded

EtherCAT

EtherCAT characteristics	
Bus protocol	EtherCAT
Device profile	Encoder profile CANopen® CiA 406 Vers. 4.0.2 dated August 18, 2016
Operating modes	Free Run, synchronous with SM3 Event, DC Mode (Distributed Clocks)
Cycle time	Min. 62.5 μs
Product features	- Gear factor (round axis) and continuous operation - Time stamp (time of position data acquisition) - Plausibility check of adjustable parameters - Comprehensive diagnosis function - Preset gauge for position - File Access over EtherCAT (FoE)
Process data	- Position value 32-Bit input data with/without rotational speed 32 Bit - Comprehensive process data mapping
LED status display	2x Link/Activity, RUN, ERR

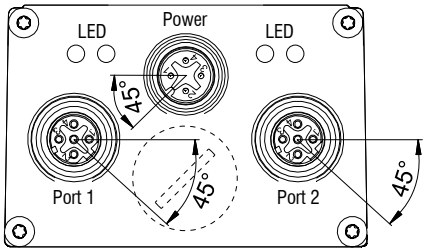

Pin Assignment

Operating voltage

Pin	Connection	Description
1	UB	Operating voltage
2	n.c.	Do not connect
3	GND	Ground connection
4	n.c.	Do not connect

1x flange connector M12 (pin), A-coded

EtherCAT (data line)

Pin	Connection	Description
1	TxD+	Transmitted data+
2	RxD+	Received data+
3	TxD-	Transmitted data-
4	RxD-	Received data-

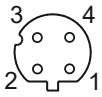

2x flange connector M12 (socket), D-coded

Output specifications
wireSENSOR

Incremental encoder

Output signals

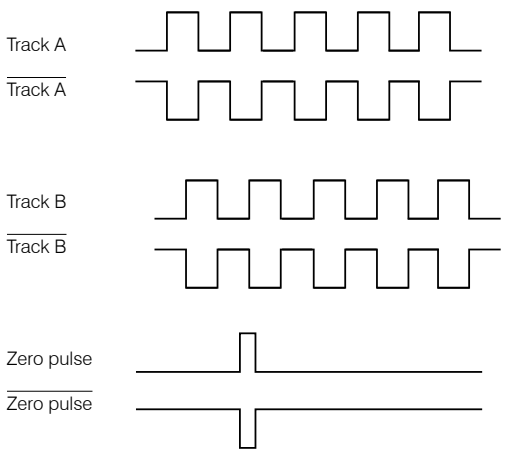

TTL Output	Line driver (5 VDC)
High level	≥ 2.5 V
Low level	≤ 0.5 V
High load	≤ 20 mA
Tracks	A, $\overline{A}$, B, $\overline{B}$, 0

Output TTL01/ TTL02	NPN (5 VDC ±5 %)
High level	> 4.5 V
Low level	< 1.0 V
High load	≤ 3 mA
Tracks (TTL01)	A, B, 0
Tracks (TTL02)	A, $\overline{A}$, B, $\overline{B}$, 0

Output HTL	Push-pull (10 ... 30 VDC)
High level	≥ V+ -3 V
Low level	≤ 1.5 V
High load	≤ 40 mA
Tracks	A, $\overline{A}$, B, $\overline{B}$, 0

Output E	Push-pull (5 VDC)
High level	≥ V+ -2.5 V
Low level	≤ 0.5 V
High load	≤ 50 mA
Tracks	A, B, 0

Output E830	Push-pull (8 ... 30 VDC)
High level	≥ V+ -3 V
Low level	≤ 2.5 V
High load	≤ 50 mA
Tracks	A, B, 0

Pin assignment TTL, HTL		
Connector	Cable color	Assignment
Pin 1	pink	B-
Pin 2	-	-
Pin 3	blue	R+
Pin 4	red	R-
Pin 5	green	A+
Pin 6	yellow	A-
Pin 7	-	-
Pin 8	gray	B+
Pin 9	-	-
Pin 10	white	GND
Pin 11	-	-
Pin 12	brown	UB

Pin assignment E, E830	
Cable color	Assignment
white	0 V
brown	V+
green	A
-	$\overline{A}$
yellow	B
-	$\overline{B}$
gray	0

Pin assignment TTL01	
Cable color	Assignment
brown	0 V
gray	V+
white	A
green	B
yellow	0

Pin assignment TTL02	
Cable color	Assignment
red	V+
black	0 V
brown	A
black	$\overline{A}$
orange	B
black	$\overline{B}$
yellow	0
black	n. c.

Sensors and Systems from Micro-Epsilon

Sensors and systems for displacement, distance and position

Sensors and measurement devices for non-contact temperature measurement

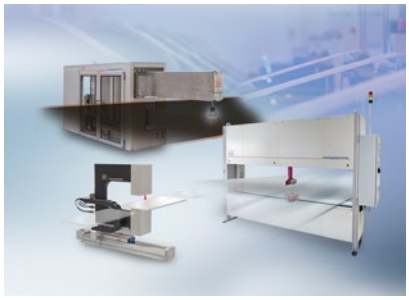

Measuring and inspection systems for metal strips, plastics and rubber

Optical micrometers and fiber optics, measuring and test amplifiers

Color recognition sensors, LED analyzers and inline color spectrometers

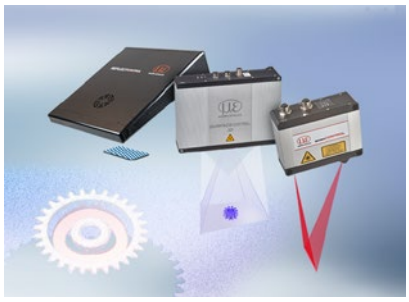

3D measurement technology for dimensional testing and surface inspection

Modifications reserved / Y9761111-J032045GKE

MICRO-EPSILON

MICRO-EPSILON Headquarters
Koenigbacher Str. 15 · 94496 Ortenburg / Germany
Tel. +49 (0) 8542 / 168-0 · Fax +49 (0) 8542 / 168-90
info@micro-epsilon.com · **www.micro-epsilon.com**