MICRO-EPSILON

Quick Manual

confocalLINE CLI85xx Ethernet

CLI8500-7

Contents

General **3**
Symbols Used 3
Warnings 3
Intended Use 4
Glossary 4
Proper Environment 4

Mechanical Fastening Sensor **5**
Electrical Connections 9
Connection Options, Pin Assignment 9
Power Supply 12

Sensor LEDs **13**

Initial Operation, Software **14**
Installation 14
Start 3DInspect, IP-Address 15
Positioning the Target, Exposure Time 16
Output of 2D profile data, 3D point clouds 17

Disclaimer **18**

Service, Repair **18**

Decommissioning, Disposal **19**

MICRO-EPSILON
MESSTECHNIK
GmbH & Co. KG
Koenigbacher Str. 15

94496 Ortenburg / Germany

Tel. +49 (0) 8542 / 168-0
Fax +49 (0) 8542 / 168-90
e-mail info@micro-epsilon.com
www.micro-epsilon.com

You can find more information about the measuring system in the operating instructions. They are available online at:

https://www.micro-epsilon.com/download-file/man--confocalLINE-CLI85xx--en.pdf

General

Symbols Used

The following symbols are used in this document:

⚠ CAUTION	Indicates a hazardous situation which, if not avoided, may result in minor or moderate injury.
NOTICE	Indicates a situation that may result in property damage if not avoided.
➡	Indicates a user action.
i	Indicates a tip for users.
`Measurement`	Indicates hardware or a software button/menu.

Warnings

⚠ CAUTION	Connect the power supply and the display/output device according to the safety regulations for electrical equipment. > Risk of injury, damage to or destruction of the sensor > Damage to or destruction of the sensor Do not drop the sensor. > Risk of injury
NOTICE	The supply voltage must not exceed the specified limits. > Damage to or destruction of the sensor Avoid shocks and impacts to the sensor. > Damage to or destruction of the sensor Protect the cables against damage. > Failure of the measuring device Avoid exposure of sensor to aggressive media (detergents, cooling emulsions). > Damage to or destruction of the sensor

Intended Use

- The measuring system is designed for use in an industrial environment. It is used for
  - topographie, edge, step and gap measurement
  - quality monitoring
- The measuring system must only be operated within the limits specified in the technical data.
- The measuring system must only be used in such a way that no persons are endangered or machines are damaged in the event of malfunction or total failure of the sensor.
- Take additional precautions for safety and damage prevention in case of safety-related applications.

Glossary

SMR	Start of measuring range
MMR	Mid of measuring range
MR	Measuring range
EMR	End of measuring range

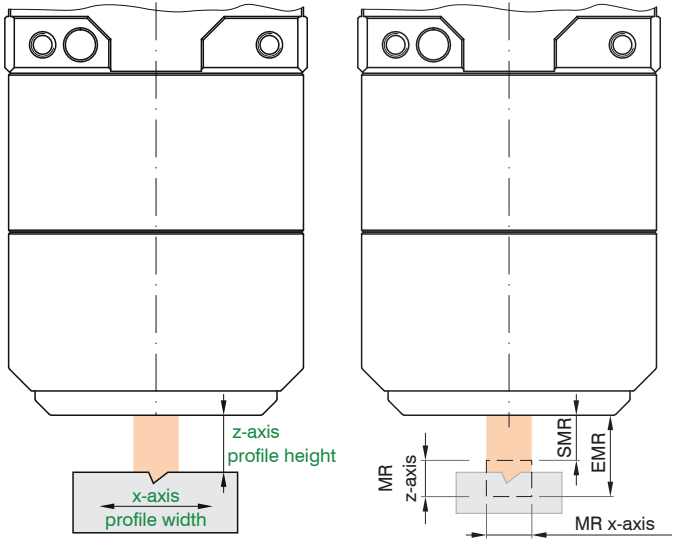

Proper Environment

Sensor protection class	IP 53
Operating temperature range	+20 ... +30 °C (+68 ... +86 °F)
Temperature range (storage)	0 ... +50 °C (+32 ... +122 °F)
Humidity	5 ... 95 % (non-condensing)
Ambient pressure	Atmospheric pressure
Shock (DIN EN 60068-2-27)	15 g / 6 ms
Vibration (DIN EN 60068-2-6)	2 g / 20 … 500 Hz

Mechanical Fastening Sensor

The optical sensors measure in the nanometer range. Observe the maximum tilt angle between sensor and target. Ensure careful handling during installation and operation of the sensor.

⚠ CAUTION Sensor weight. Injury to the limbs possible. Do not drop the sensor.

Mount the sensor on a flat surface. Fasten the sensor only using the existing threaded blind holes or the mounting bore for a suitable centering mandrel. Any type of clamping is not permitted. The sensor can be mechanically mounted using any of five different mounting surfaces or mounting areas.

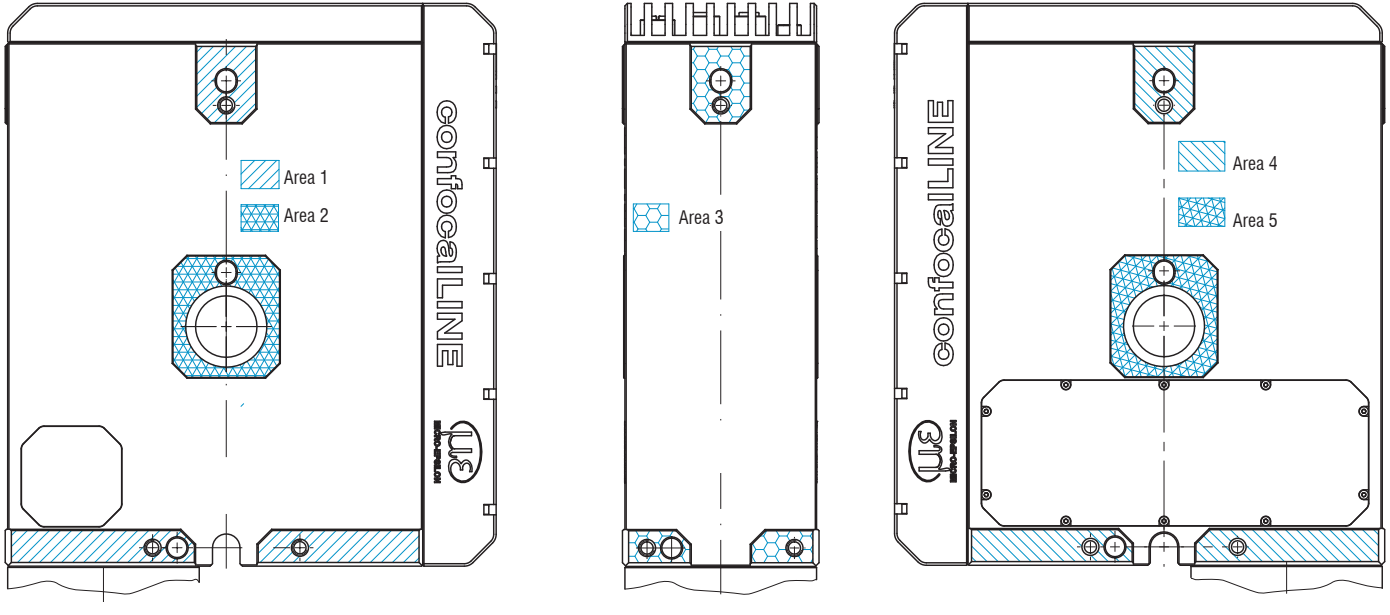

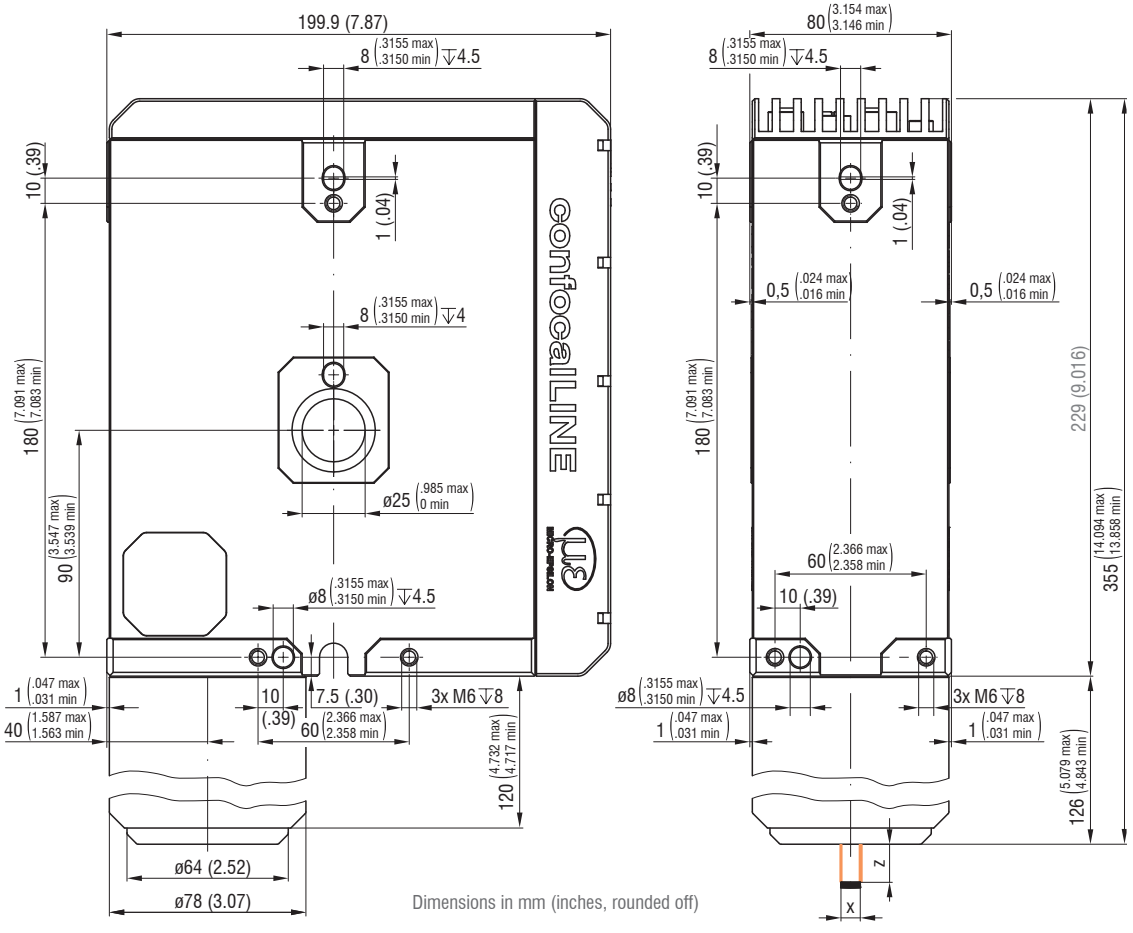

Fig. 1 Dimensional drawing CLI8500-7

Depending on the mounting orientation, we recommend locating the sensor using centering elements or the optionally available adapter plate.

If possible, orient the sensor so that it measures downward. This reduces dust deposits on the optical aperture.

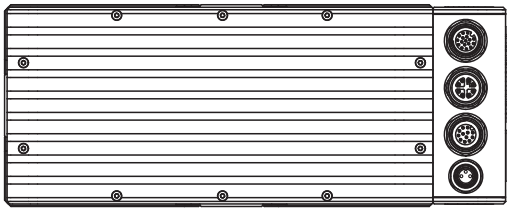

Fig. 2 Top view CLI8500-7

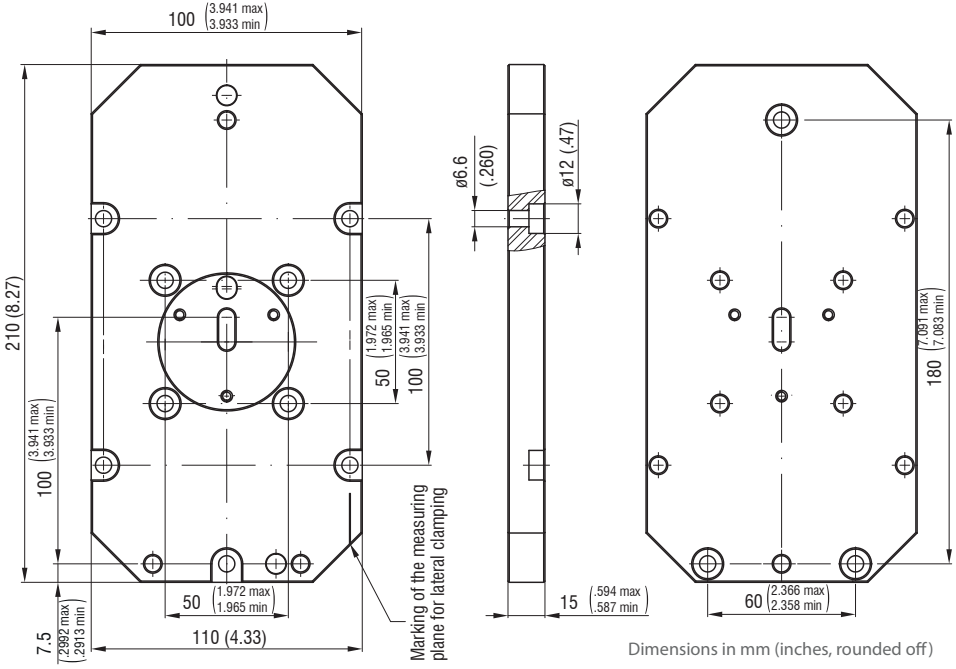

Fig. 3 Dimensional drawing of the adapter plate

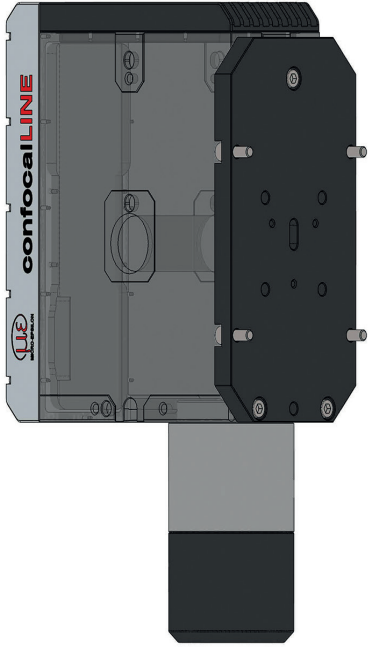

Example of front mounting using an adapter plate

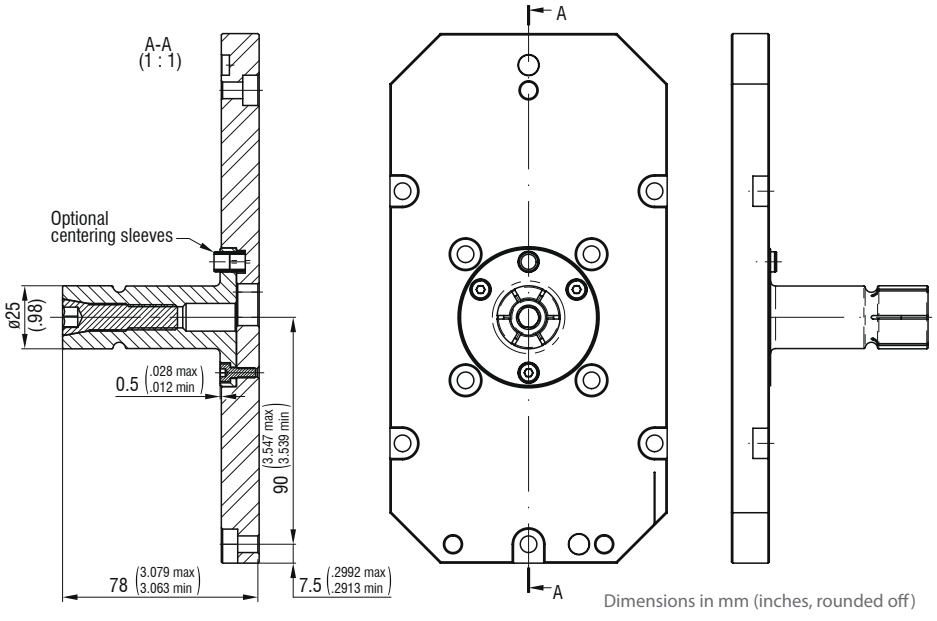

Fig. 4 Dimensional drawing of the adapter plate with centering mandrel

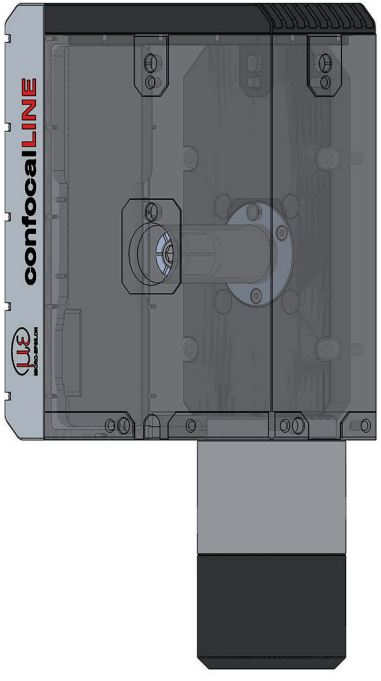

Example of mounting using the adapter plate and centering mandrel

Electrical Connections

Connection Options, Pin Assignment

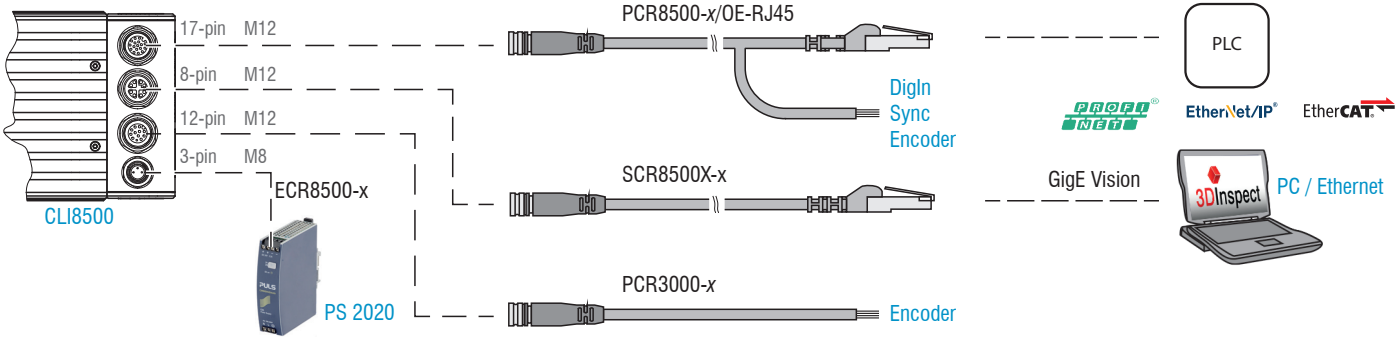

Pin, 12-pin M12	Signal	PCR3000-x	Notes
1	Encoder 4A+	Red	Differential Input
2	Encoder 4A -	Blue	
3	Encoder 4B+	Violet	
4	Encoder 4B -	Black	
5	Encoder 4Ref+	White	
6	Encoder 4Ref -	Brown	
7	Encoder 5A+	Grey-pink	
8	Encoder 5A -	Red-blue	
9	Encoder 5B+	Green	
10	Encoder 5B -	Yellow	
11	Encoder 5Ref+	Grey	
12	Encoder 5Ref -	Pink	
Housing	Shield		

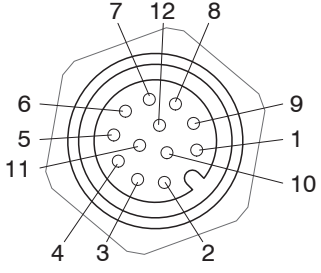

12-pin female M12 on the sensor, A-coded, View: pin side

The PCR3000-x cable is available as an optional accessory from Micro-Epsilon.

Pin, 17-pin M12	Signal		PCR8500-x/OE-RJ45	Notes
3	GND In		Black	
5	SYNC-I/O+	Encoder 2A+	White	Differential In-/Output RS422 level
6	SYNC-I/O -	Encoder 2A -	Brown	
7	Encoder 2B+		Grey-pink	
8	Encoder 2B -		Red-blue	
9	Trigger		Green-black	Switching input 1
10	U-Mod	Encoder 1A	Yellow-black	Switching input 2
11	U-Mod	Encoder 1B	Grey-black	Switching input 3
12	U-Mod		Pink-black	Switching input 4
15	RX		White-green	Industrial Ethernet
14	/RX		Green	
17	TX		White-orange	
16	/TX		Orange	
13	Shield Ethernet			
Housing	Shield			

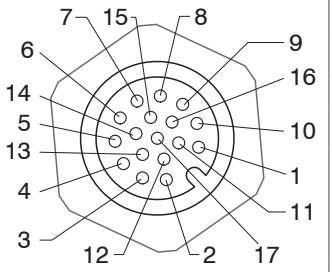

17-pin female M12 on the sensor, A-coded, View: pin side

The PCR8500-x/OE-RJ45 cable is available as an optional accessory from Micro-Epsilon.

The differential inputs and outputs can be used for encoder or synchronization.

The single-ended switching inputs can be used for encoder, trigger, and mode switching. The signal levels of all switching inputs can be configured via software as either LLL (low voltage, TTL logic) and HLL (high voltage, HTL logic):

- LLL level: Low 0 V … 0.8 V, High 2.4 V … 5 V, internal pull-up/down resistor 10 kOhm through V_+ / GND
- HLL level: Low 0 V … 3 V, High 11 V … 24 V (max. 30 V), internal pull-up/down 10 kOhm through V_+ / GND
- Pulse width: ≥ 5 μs.

Pin, 8-pin M12	Signal	SCR8500X-x	Notes
1	TX	White-orange	Industrial Ethernet
2	/TX	Orange	
3	RX	White-green	
4	/RX	Green	
5	RX	White-brown	
6	/RX	Brown	
7	TX	White-blue	
8	/TX	Blue	
Shield Ethernet			

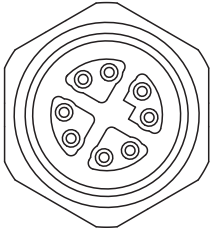

8-pin female connector M12
on the sensor, X-coded,
View: pin side

The SCR8500-x cable is available as an optional accessory from Micro-Epsilon.

Power Supply

Pin, 3-pin M8	Signal	ECR8500-x	Notes
1	24P0 (V_+)	Red	12 ... 30 VDC (2.5 A @ 24 V) Integral reverse polarity protection
2	GND	Blue	
Housing	Shield		

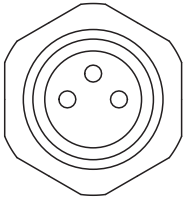

3-pin female connector M8, A-coded, view: pin side

For optimum performance, use a dedicated 24 V power supply suitable for measuring equipment. To ensure optimum function and accuracy of the system, this power supply should not be used simultaneously for drives, contactors, or other devices with impulse-shaped interference sources.

Use a galvanically isolated power supply in accordance with LPS or NEC Class 2. The cable shield is connected to the connector housing and is galvanically isolated from GND. The ECR8500-x cable is available as an optional accessory from Micro-Epsilon.

Sensor LEDs

LED	Yellow	Light source on
	Off	Light source off
Data	Green	Measurement active
	Green, flashes	Data transmission active
	Green, lights up	Controller Access
Error	Red, flashes	See error code
RUN/SF/MS ERR/BF/NS		Depending on Industrial Ethernet operation (IE)

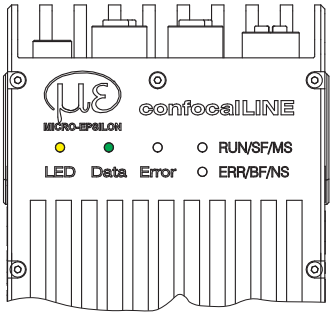

Initial Operation, Software

Installation

- Install the hardware of the Ethernet interface if not already installed.
- Configure the following Ethernet interface settings, including jumbo frames (maximum value), interrupt throttling (enable), interrupt throttling rate (adaptive), and receive buffer (maximum value).
- Install the 3DInspect software. This software is available online on the sensor‘s product page or in the Downloads section:
  https://www.micro-epsilon.com/2d-3d-measurement/3dinspect-software.
  Alternatively, you can configure and control the sensor using the Pleora eBus Player software.

The following system requirements are recommended for the operation of 3DInspect.

- Windows 10 or Windows 11 (64 Bit)
- 3 GHz prozessor (64 Bit) or higher
- 16 GB RAM
- Screen resolution: 1920 x 1080
- Dedicated graphics card

Further literature
You can download a PDF of the detailed 3DInspect operating instructions from our website:

https://www.micro-epsilon.com/fileadmin/download/manuals/man--3DInspect--en.pdf

- Connect the sensor and the PC using the SCR8500-x interface cable.

i Connect the sensor directly to the PC. Do not use hubs or switches. The PC and the sensor must be located in the same subnet.

➡ Switch on the supply voltage.

The sensor is ready for operation after approx. 60 seconds. The `Data` LED lights up green. The sensor requires a warm up period of about 30 min, for precise measurements 120 min.

Start 3DInspect, IP-Address

➡ Launch `3DInspect`.

After the program has started, the software automatically connects to the sensor connected to the PC if the IP addresses and subnets are compatible. If multiple sensors are connected to the PC, a dialog box appears allowing you to select the desired sensor.

To avoid an address conflict when multiple sensors are present or to adapt the IP address, you must change the IP address of the affected sensors.

➡ Switch to the menu `Options > Ethernet Configurator`.

➡ Select the desired sensor.

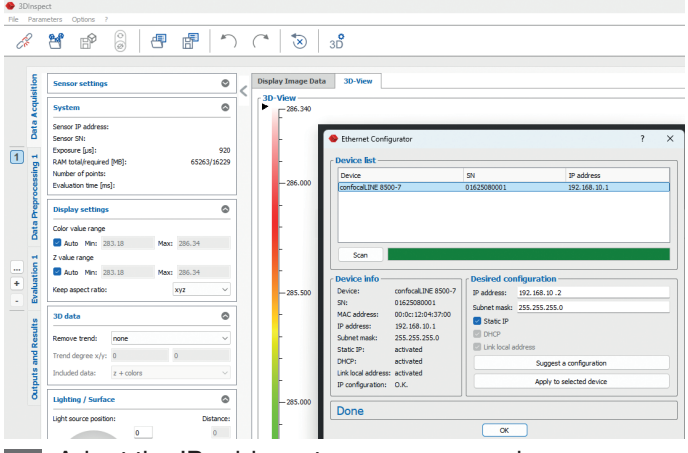

➡ Adapt the IP address to your own needs.

Positioning the Target, Exposure Time

- Switch to the `Data Acquisition` tab.
- Position the target as centrally as possible within the measuring range.

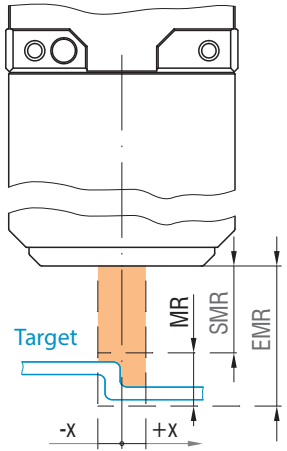

Fig. 5 Step profile in the measuring range

Ensure uniform exposure across the entire measuring range in the X direction. The aim is to see a thin line on the matrix in the 2D display. You can recognize overexposure by a thick line.

- Increase/decrease the exposure time, if necessary. Menu `Sensor Settings > Exposure`.
- In the `Sensor Settings > Advanced` menu, select 2D as the data format and 2D-View as visualization.

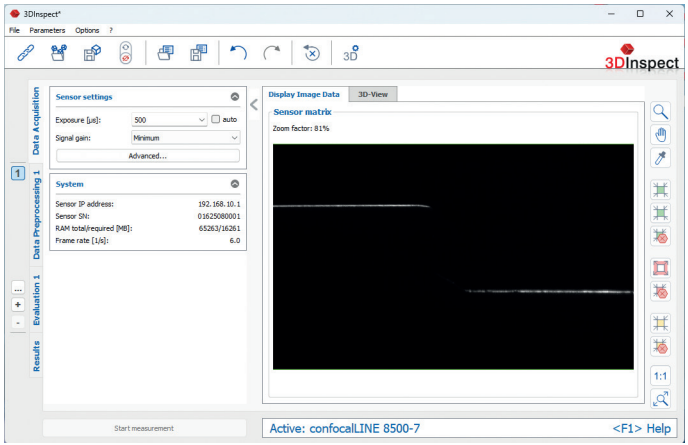

Fig. 6 Sensor data of step profile, Display `Image Data view`*,*

Output of 2D profile data, 3D point clouds

The profile data can be accessed in the following ways:

- GigE Vision and GenICam

This is a common interface standard for industrial image processing (based on Gigabit Ethernet).

- Micro-Epsilon 3D Sensor SDK for fast application integration (C, C++, C#, Python, Linux, and others)

Please refer to the respective SDK documentation for further information on accessing the profile data.

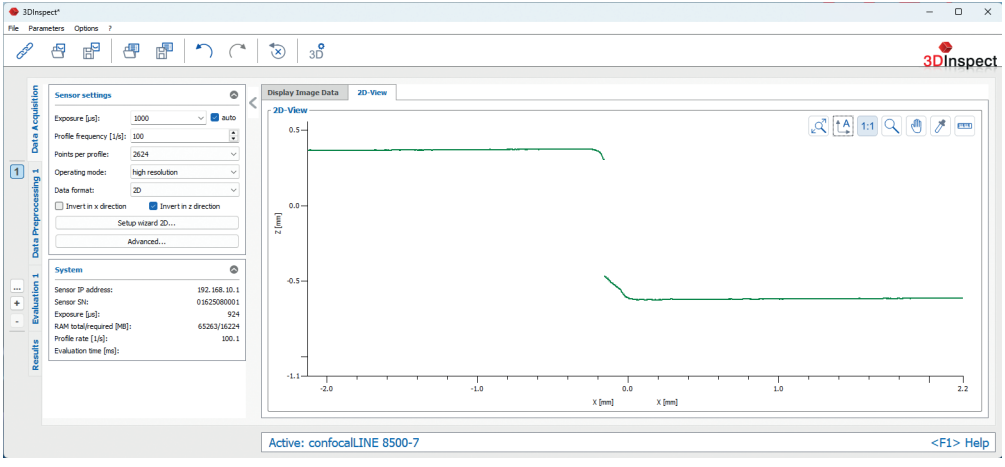

Fig. 7 First measurement results of a step profile in 2D-View

Disclaimer

All components of the device have been checked and tested for functionality in the factory. However, should any defects occur despite careful quality control, these shall be reported immediately to MICRO-EPSILON or to your distributor/retailer. MICRO-EPSILON undertakes no liability whatsoever for damage, loss or costs caused by or related in any way to the product, in particular consequential damage, e.g., due to

- non-observance of these instructions/this manual,
- improper use or improper handling (in particular due to improper installation, commissioning, operation and maintenance) of the product, repairs or modifications by third parties,
- the use of force or other handling by unqualified persons.

This limitation of liability also applies to defects resulting from normal wear and tear (e.g., to wearing parts) and in the event of non-compliance with the specified maintenance intervals (if applicable).

MICRO-EPSILON is exclusively responsible for repairs. It is not permitted to make unauthorized structural and / or technical modifications or alterations to the product. In the interest of further development, MICRO-EPSILON reserves the right to modify the design and the firmware.

In addition, the General Terms of Business of MICRO-EPSILON shall apply, which can be accessed under Legal details | Micro-Epsilon https://www.micro-epsilon.com/legal-details/.

Service, Repair

If the sensor or sensor cable is defective: Save your current settings. For this, `3DInspect` offers the following features:

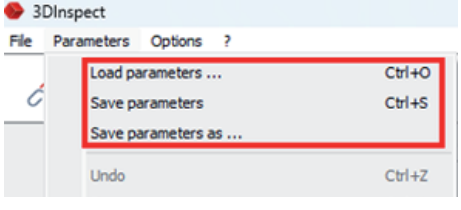

Please send us the affected parts for repair or exchange.

If the cause of a fault cannot be clearly identified, please send the entire system incl. cables to:

MICRO-EPSILON MESSTECHNIK GmbH & Co. KG
Koenigbacher Straße 15

94496 Ortenburg / Germany

Tel. +49 (0) 8542 / 168-0
Fax +49 (0) 8542 / 168-90

info@micro-epsilon.com
https://www.micro-epsilon.com

Decommissioning, Disposal

In order to avoid the release of environmentally harmful substances and to ensure the reuse of valuable raw materials, we draw your attention to the following regulations and obligations:

- Remove all cables from the sensor.
- Dispose of the sensor, its components and accessories, as well as the packaging materials in compliance with the applicable country-specific waste treatment and disposal regulations of the region of use.
- You are obliged to comply with all relevant national laws and regulations

For Germany / the EU, the following (disposal) instructions apply in particular:

- Waste equipment marked with a crossed garbage can must not be disposed of with normal industrial waste (e.g. residual waste can or the yellow recycling bin) and must be disposed of separately. This avoids hazards to the environment due to incorrect disposal and ensures proper recycling of the old appliances.

- A list of national laws and contacts in the EU member states can be found at https://ec.europa.eu/environment/topics/waste-and-recycling/waste-electrical-and-electronic-equipment-weee_en. Here you can inform yourself about the respective national collection and return points.
- Old devices can also be returned for disposal to MICRO-EPSILON at the address given in the imprint at https://www.micro-epsilon.de/legal-details/.
- We would like to point out that you are responsible for deleting the measurement-specific and personal data on the old devices to be disposed of.
- Under the registration number WEEE-Reg.-Nr. DE28605721, we are registered at the foundation Elektro-Altgeräte Register, Nordostpark 72, 90411 Nuremberg, as a manufacturer of electrical and/or electronic equipment.

MICRO-EPSILON MESSTECHNIK GmbH & Co. KG
Koenigbacher Str. 15 · 94496 Ortenburg / Germany
Tel. +49 (0) 8542 / 168-0 · Fax +49 (0) 8542 / 168-90
info@micro-epsilon.com · www.micro-epsilon.com
Your local contact: www.micro-epsilon.com/contact/worldwide/

X9691510-A022106MSC

© MICRO-EPSILON MESSTECHNIK